TVILIGHT

English

Gateway 3.1

Installation Manual

PR182335 | Rev. E | 05/10/2020

TVILIGHT PROJECTS BV / Beechavenue 162-180, 1119 PS, Schiphol-Rijk, the Netherlands
info@tvilight.com / www.tvilight.com

In box:

Gateway v3.1

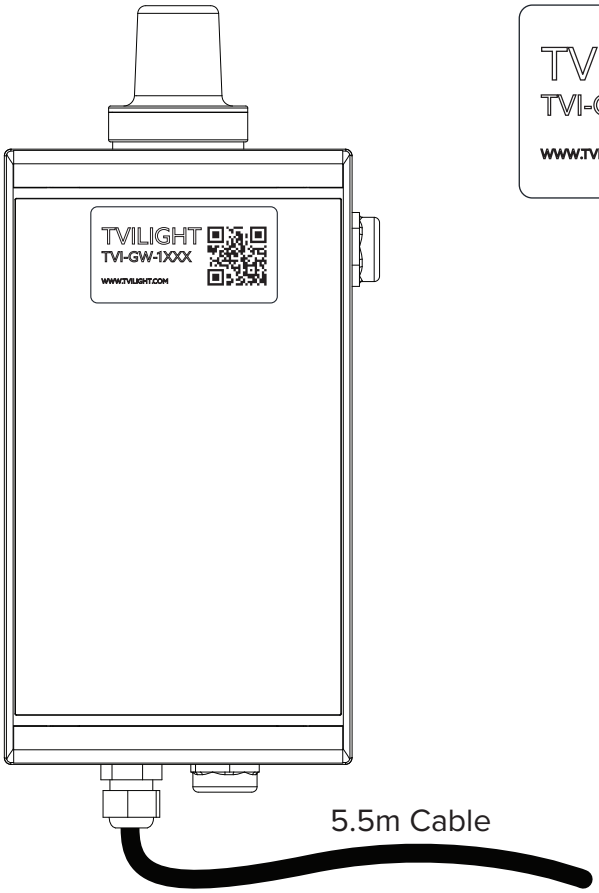

Pole ID Label

M16 Cable Gland

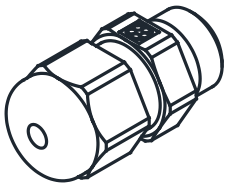

OR

20 mm Rubber Grommet

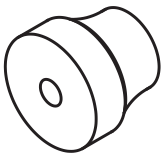

You'll need:

Drill

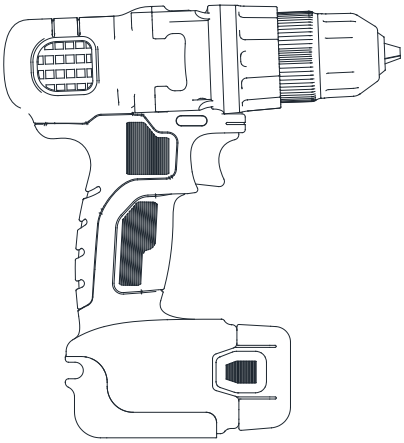

M16 Threaded
OR
20 mm

Generic Strap x 2

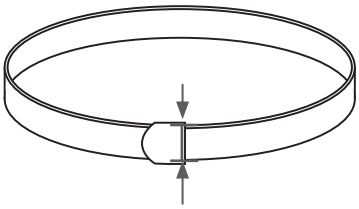

Max = 13mm
Min = 8mm

Scan&Go App

Available in the
Apple App Store
and in the
Google Play Store

1. Run wire through Cable Gland/Grommet

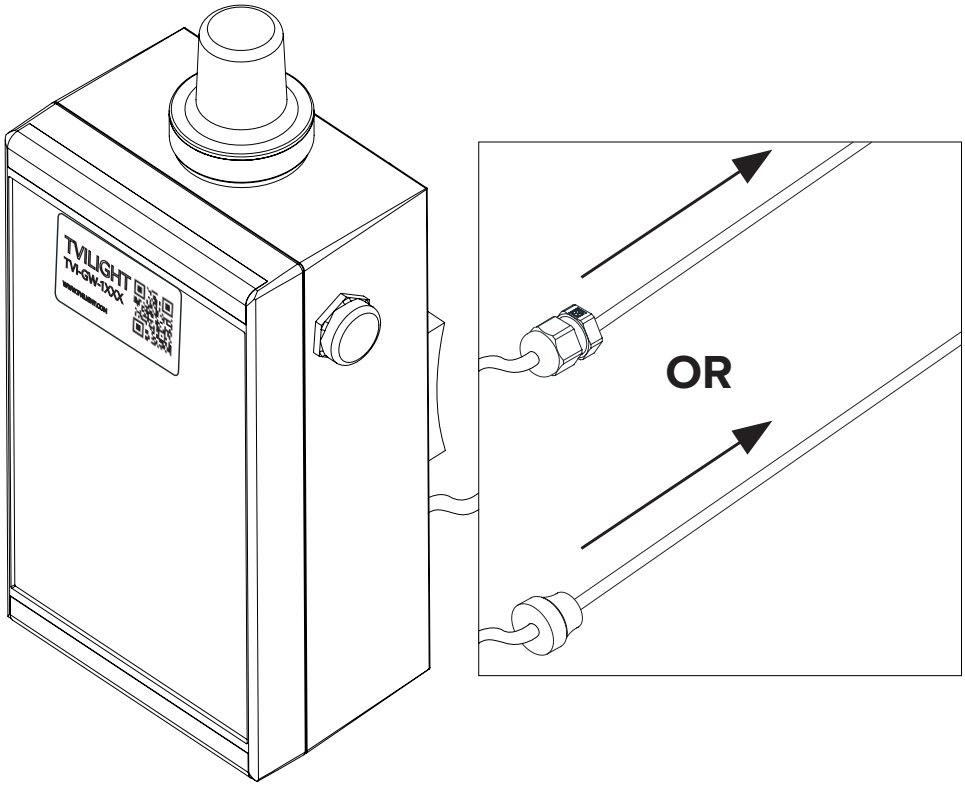

2. Drill hole into the pole:
- M16 threaded (Cable Gland) OR
- 20 mm (Grommet)

Note: For added protection against rust, the use of an anti-corrosion spray such as WD40 Corrosion inhibitor or equal is recommended.

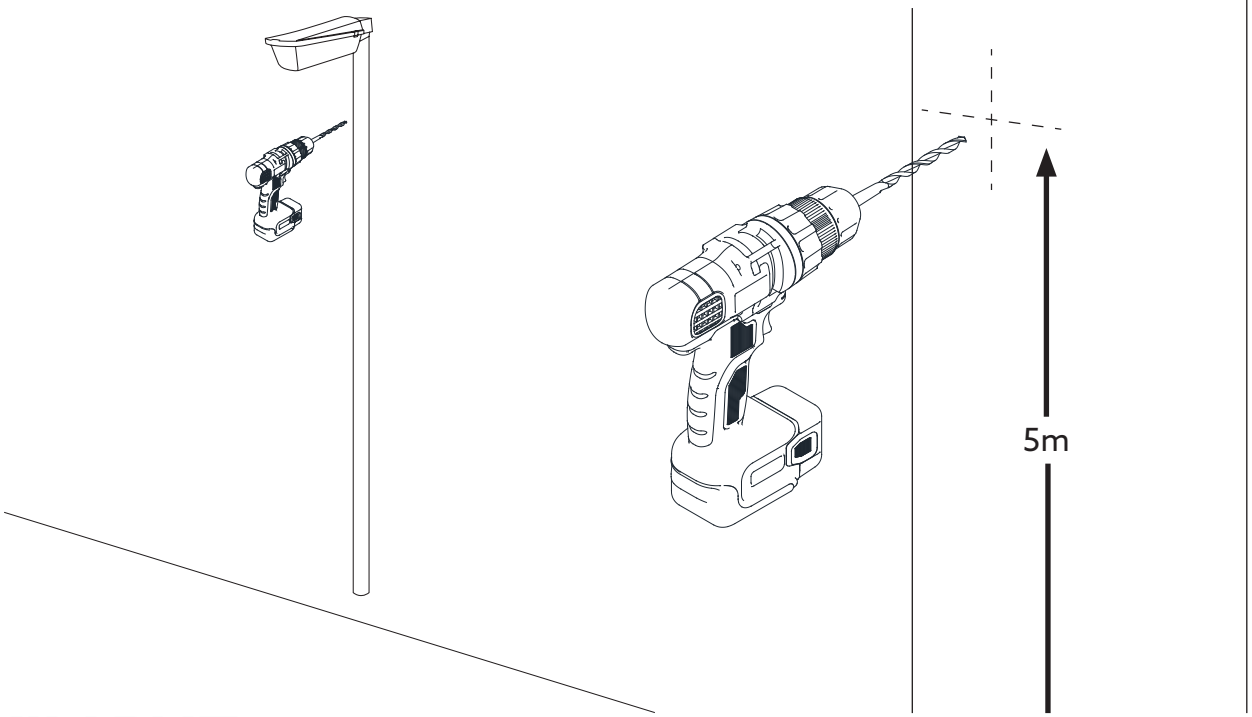

3. Run wire through hole in the pole

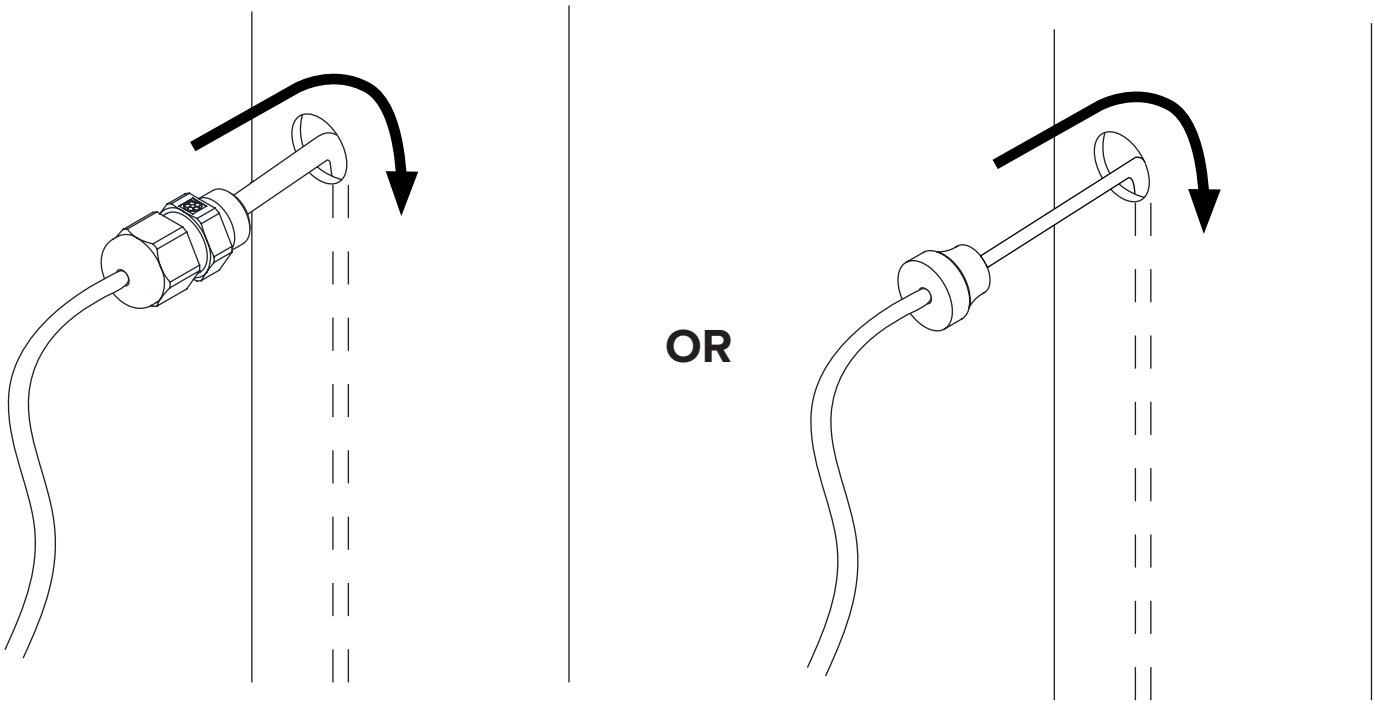

4. Insert Cable Gland/Grommet into hole in the pole

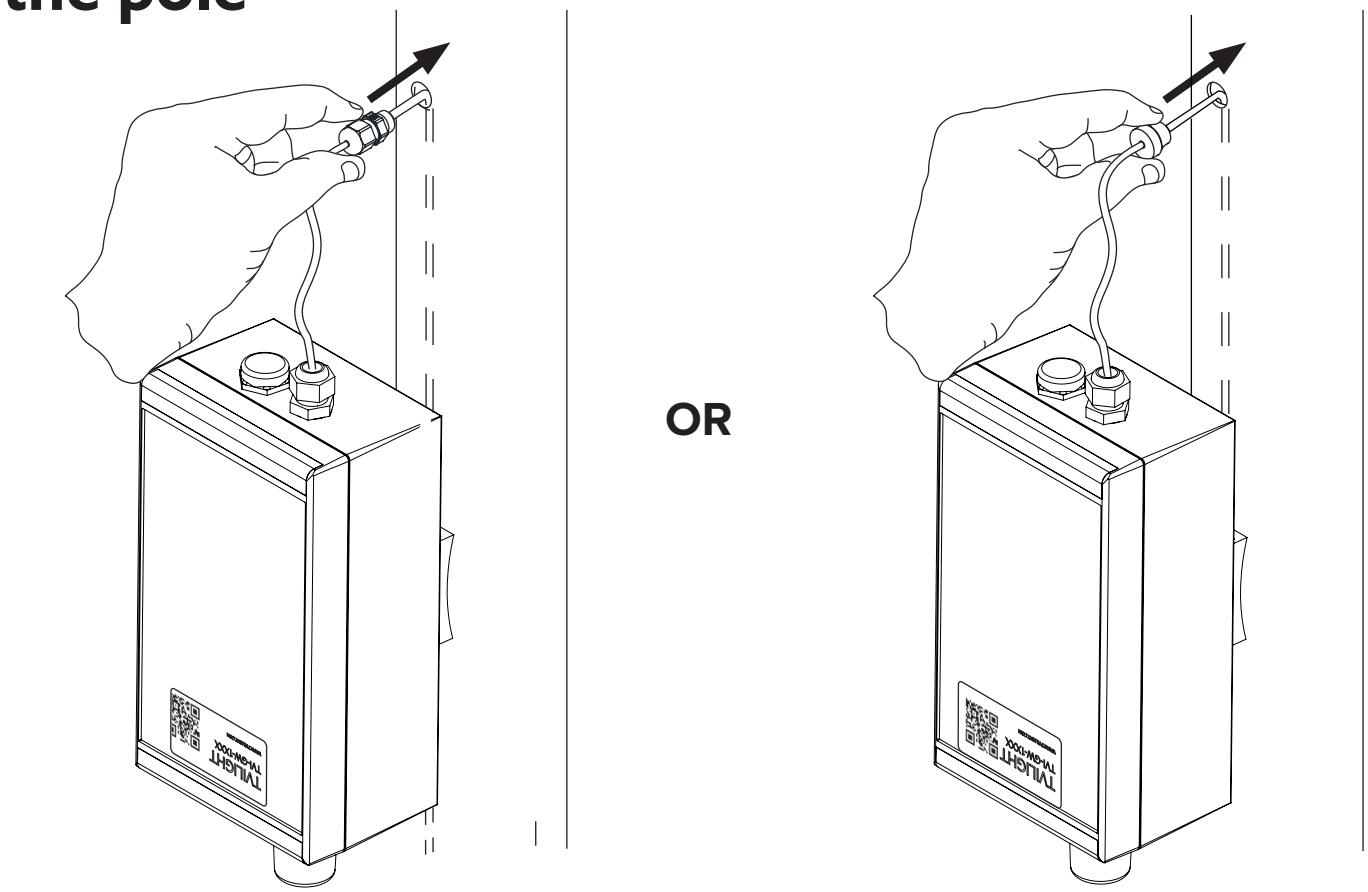

5. Screw Cable Gland OR press Grommet into the pole

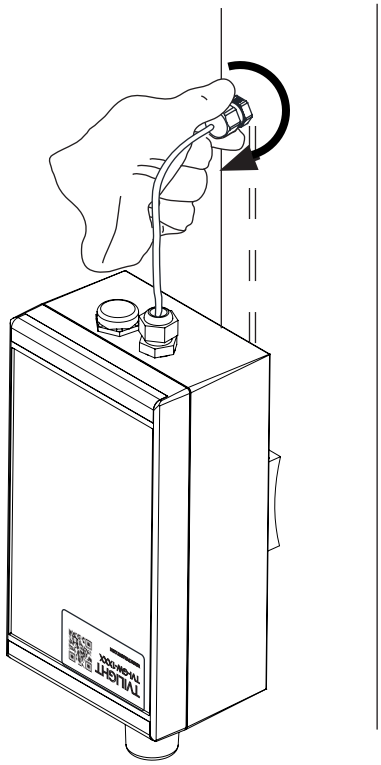

OR

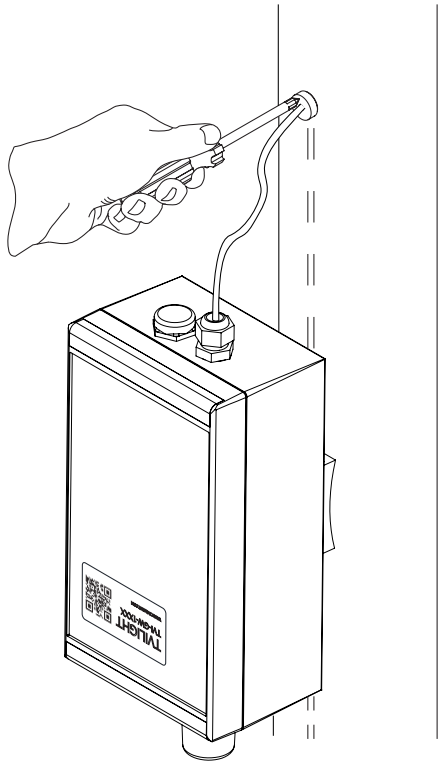

6. Strap product to the pole

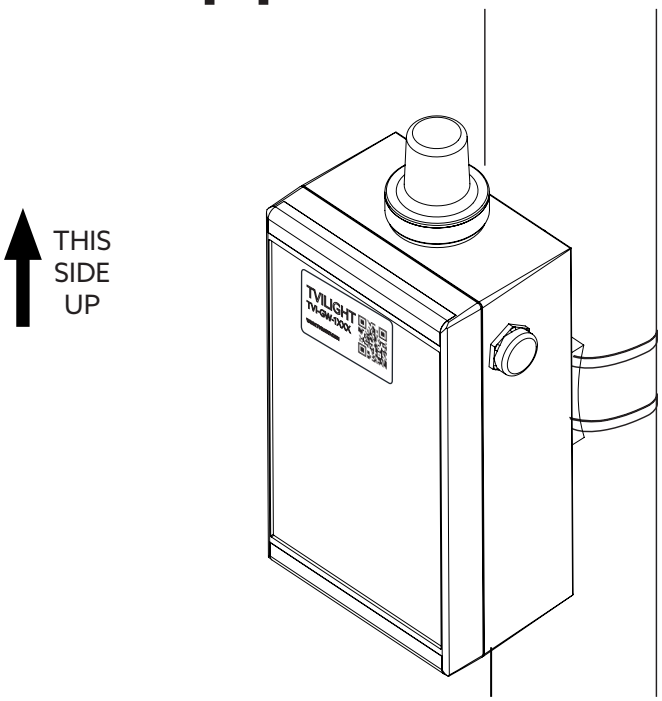

Tensioning Tool

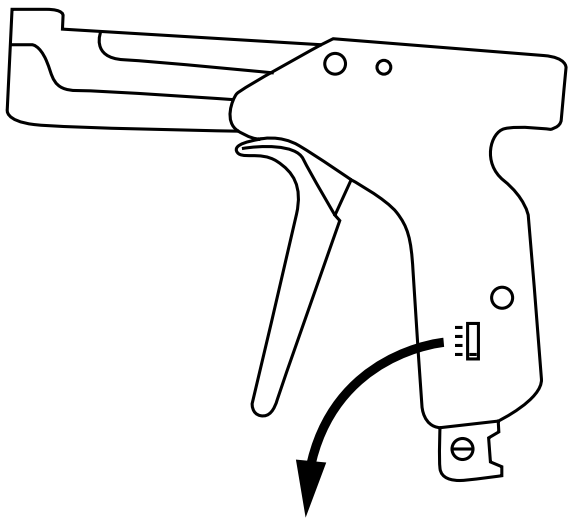

* Ensure Tensioning Tool is set to maximum tension (#4)

7. Apply Pole ID Label to the pole

Ensure that the Product and Pole ID Labels match.

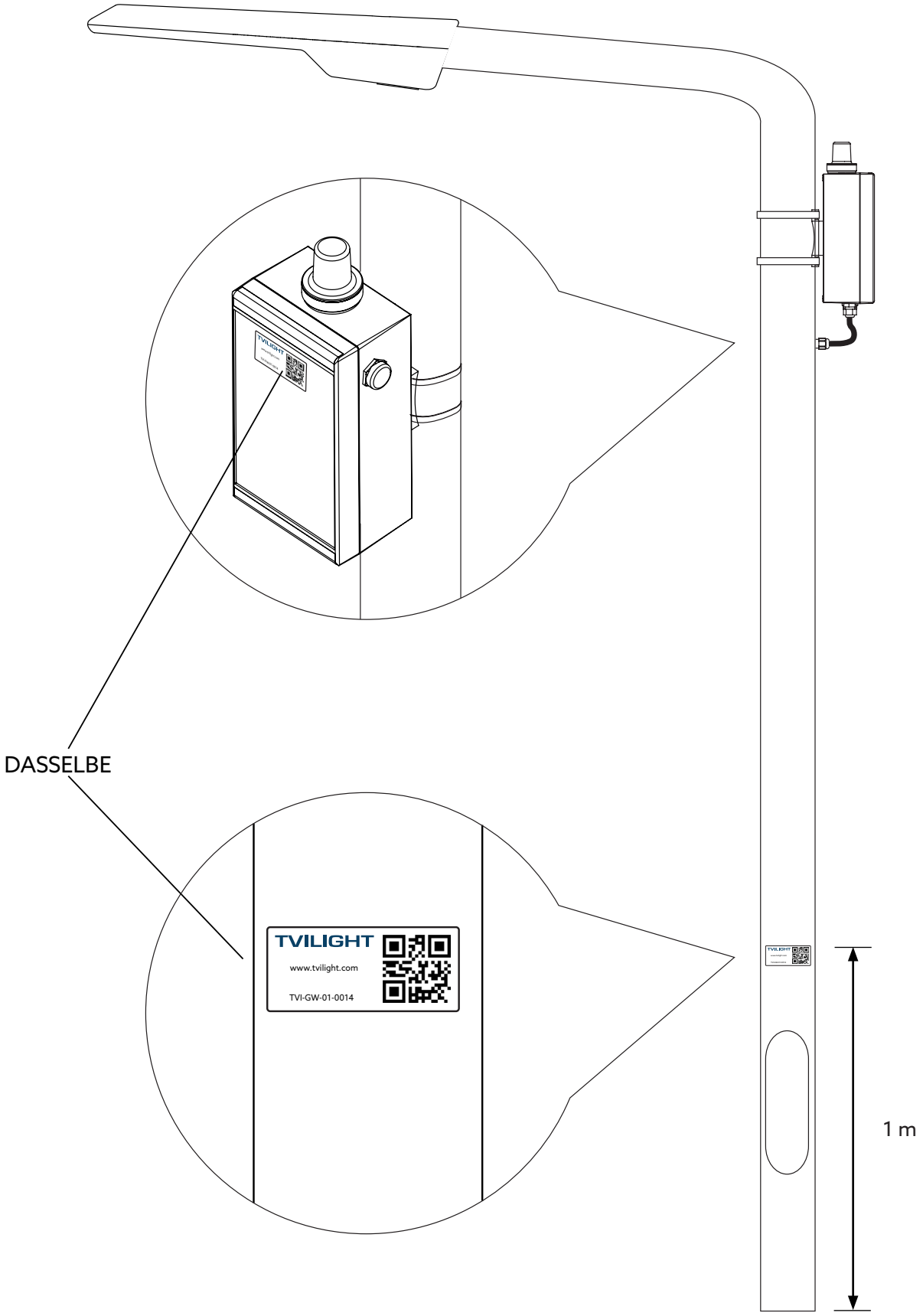

8. Add device to CityManager

1. Download Tvilight Scan&Go from Apple iOS App Store or from Google Play Store.

2. Login with your Username and Password.

3. Use the 'Add device' function in Scan&Go app to add the device to CityManager.

4. The location of the new device is determined by Scan&Go's GPS and it will be indicated on the map.

5. The Device Serial Number will be added when scanning the QR-Code with the camera.

6. Fill in the required fields (the ones with an asterisk), select the device type and also **select the type of ballast** (PWM or DALI-Logarithmic or DALI-Linear).

Note: The type of ballast must be known before installation.

7. Press save and move to next device.

For more information on how to use Scan&Go app, please visit:
https://www.tvilight.com/scan-go/

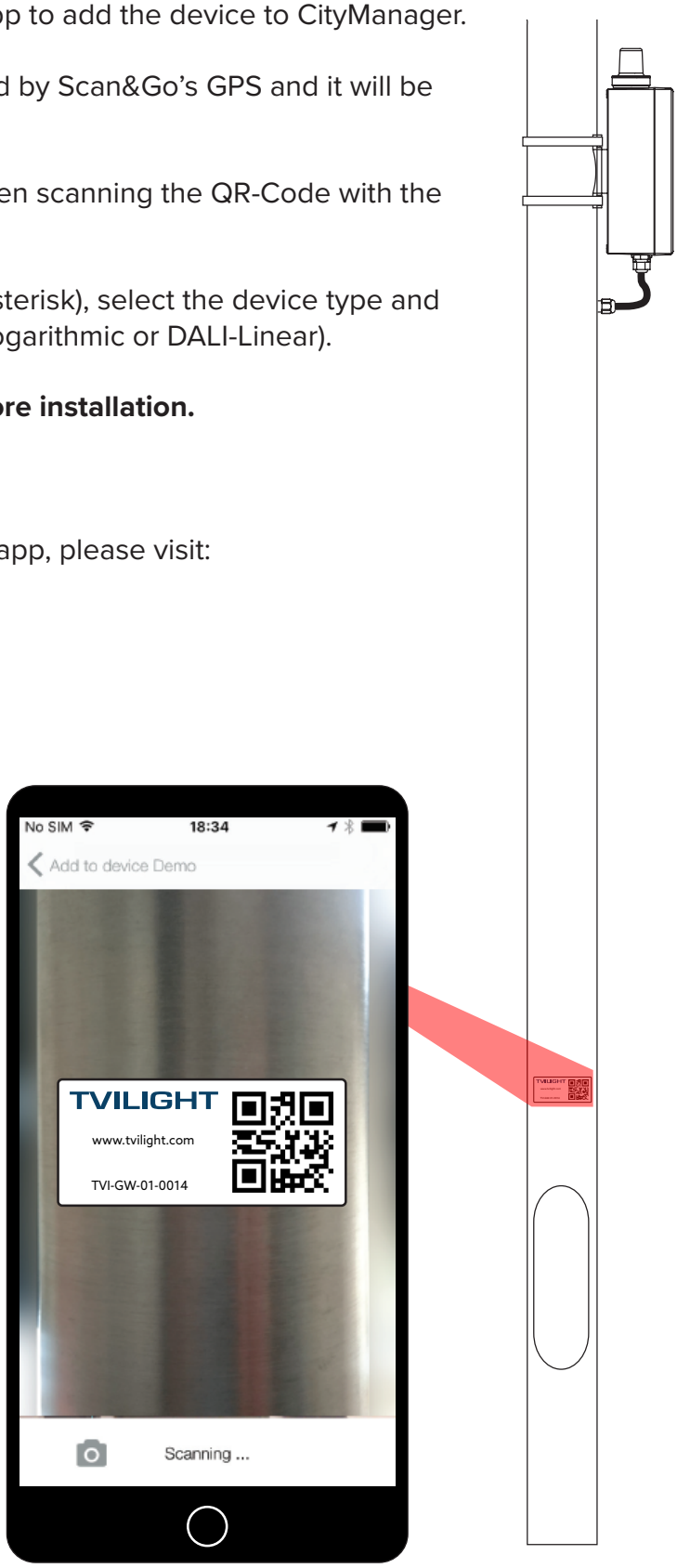

Wiring Diagram

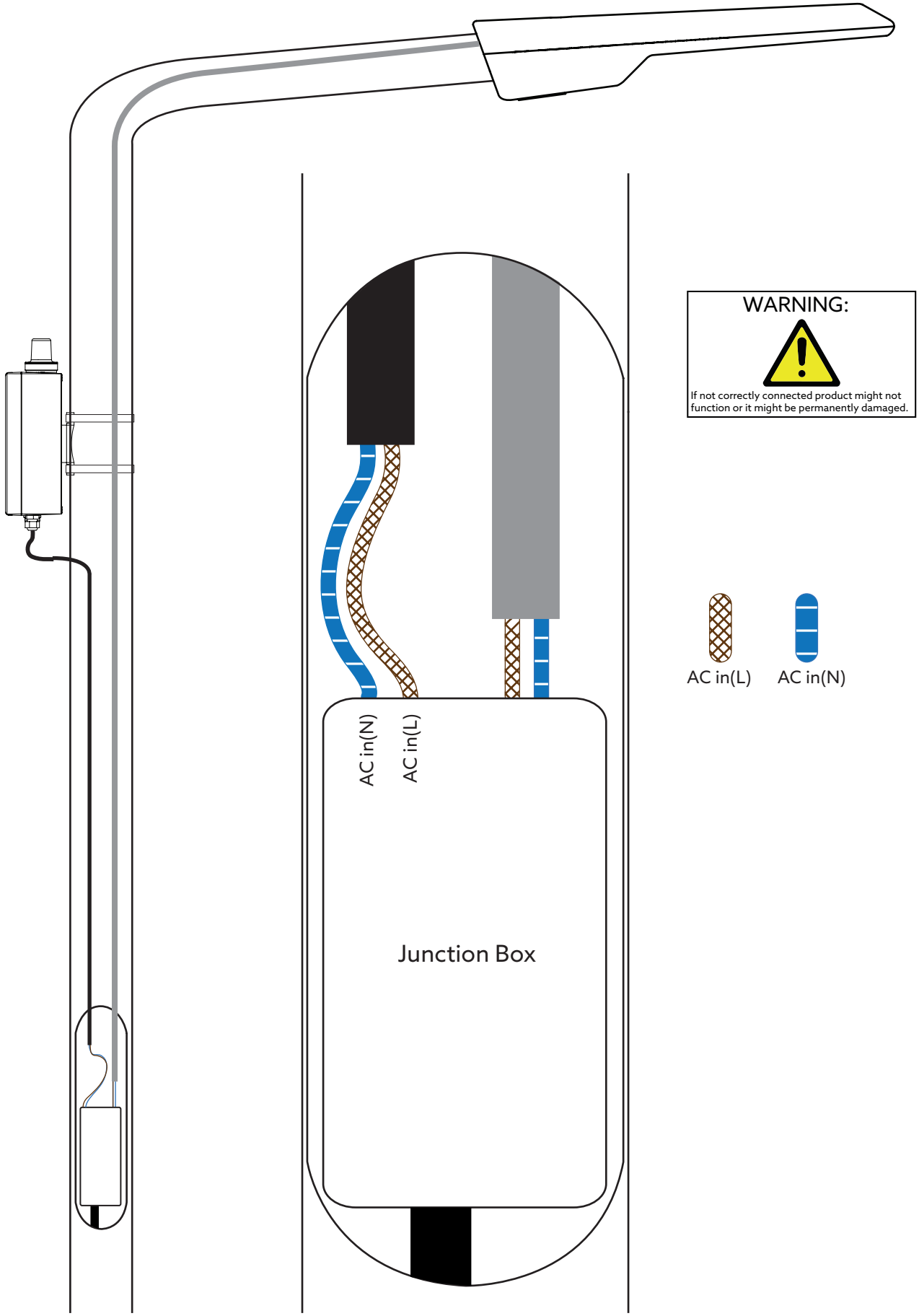

Wiring Diagram

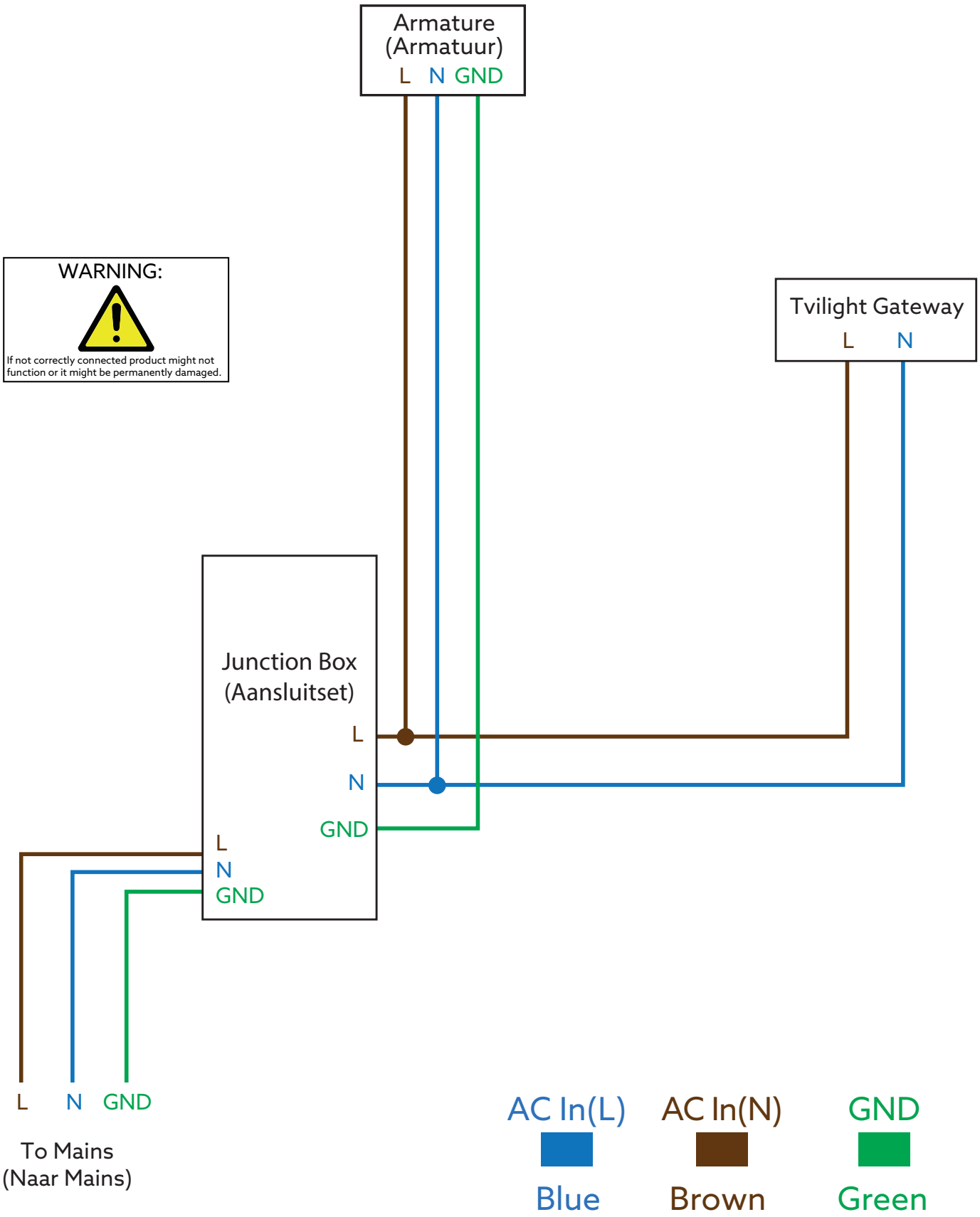

Note: **For added protection, an external circuit breaker at the power input of the product is recommended. Circuit breakers such as the ELeQ LS-94 5L2408 or similar rated products are acceptable.**

Appendix: Ethernet Cable Connection Instructions

This appendix explains how to make an Ethernet connection in the Gateway v3.1.

Required Parts:

- 1 x Wiska Pressure Compensation Cable Gland ESVG 20, RAL 7035, M20 (Manufacturer Part #: 10060974)
- 1 x Wiska Reduction Sealing Insert, RDE 20, M20 (Manufacturer Part#: 10062185)
- Category 5, 6, or 7 Ethernet Cable (without Connector); 8 mm max Cable diameter
- 2 x RJ45 Connector for Ethernet Cable

Required Tools:

- RJ45 Ethernet Cable Crimping Tool

A1. Remove the Vent Gland located at the lower side of the GW

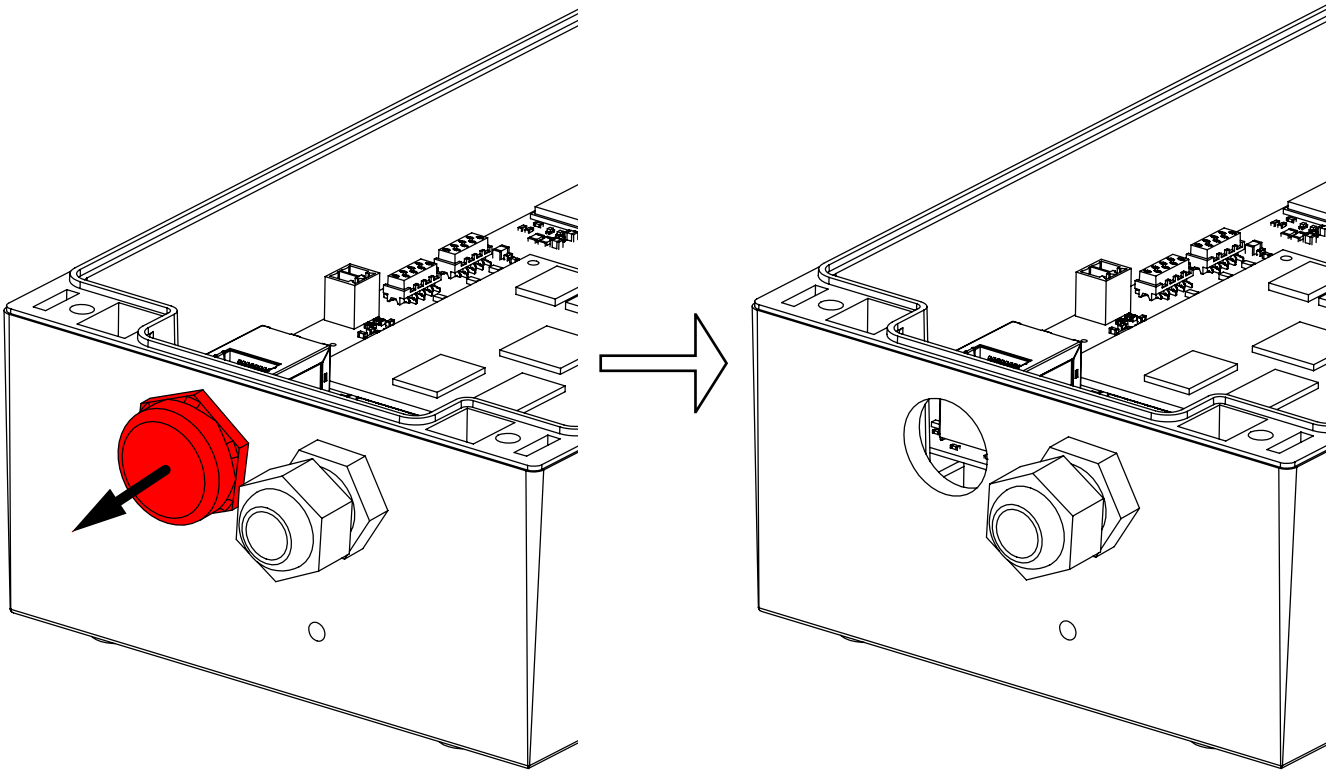

A2. Insert and tighten the M20 Venting Cable Gland in the open hole

Note: Installation Torque of Venting Cable Gland: 4 Nm

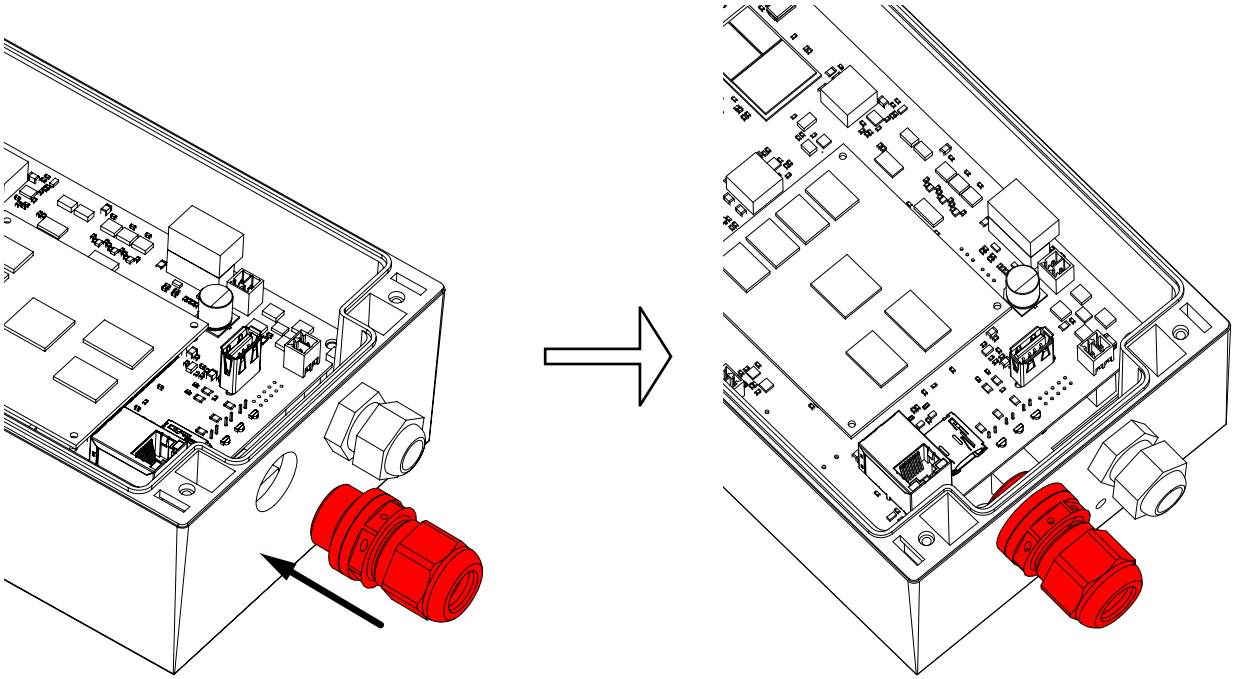

A3. Remove Sealing Nut from the M20 Venting Cable Gland and insert the Reduction Sealing Insert

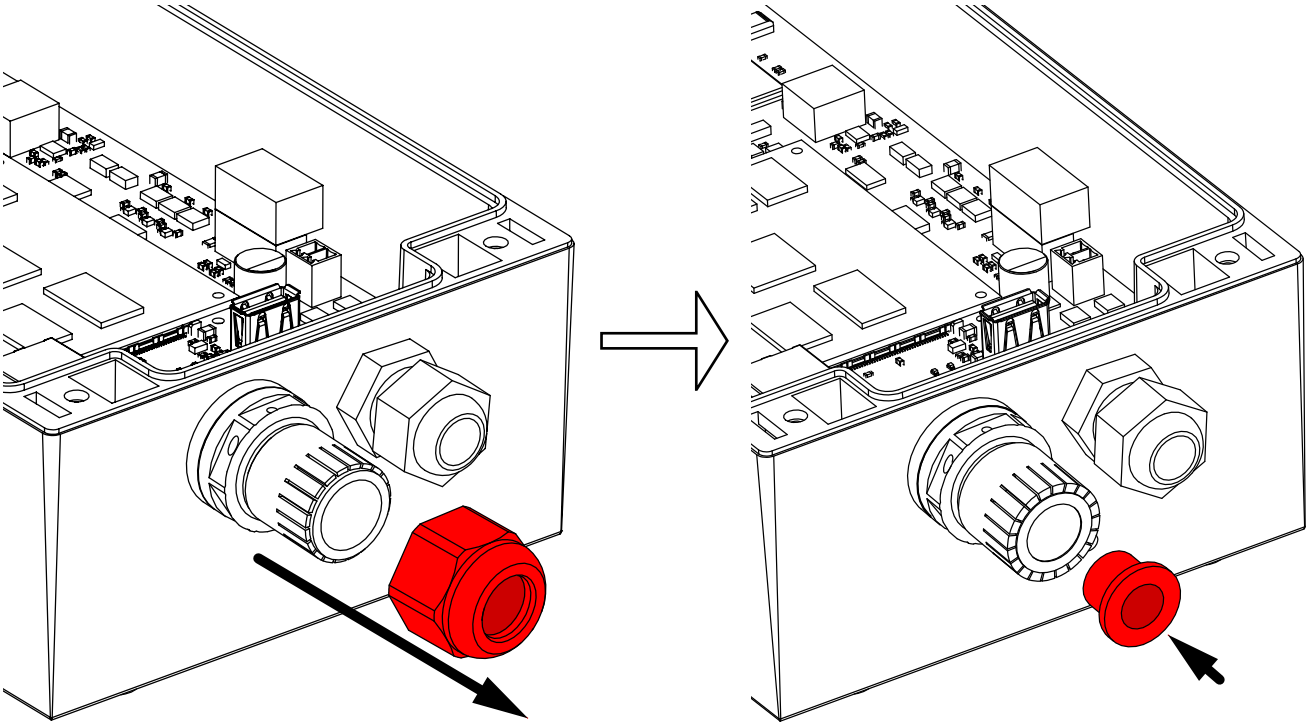

A4. Put the Sealing Nut back onto the Venting Cable Gland

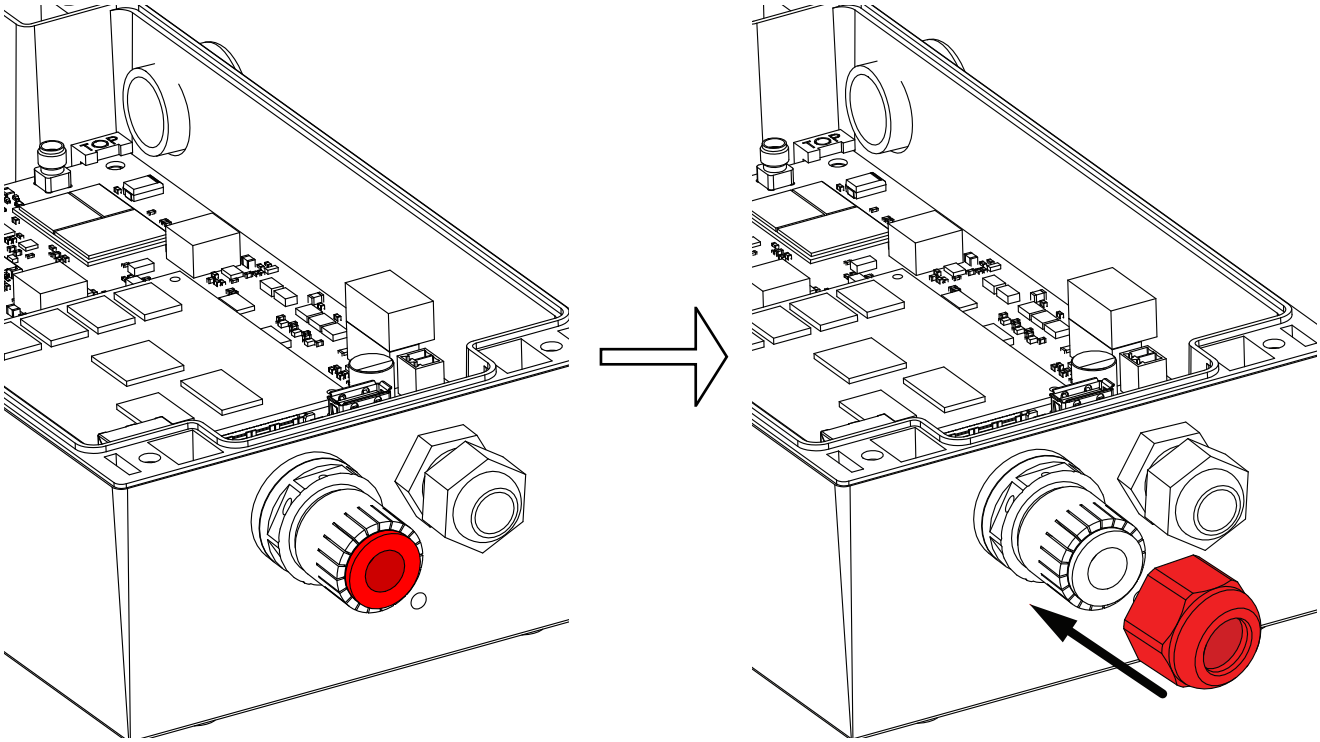

A5. Run the Ethernet Cable (without connector) through the Venting Cable Gland

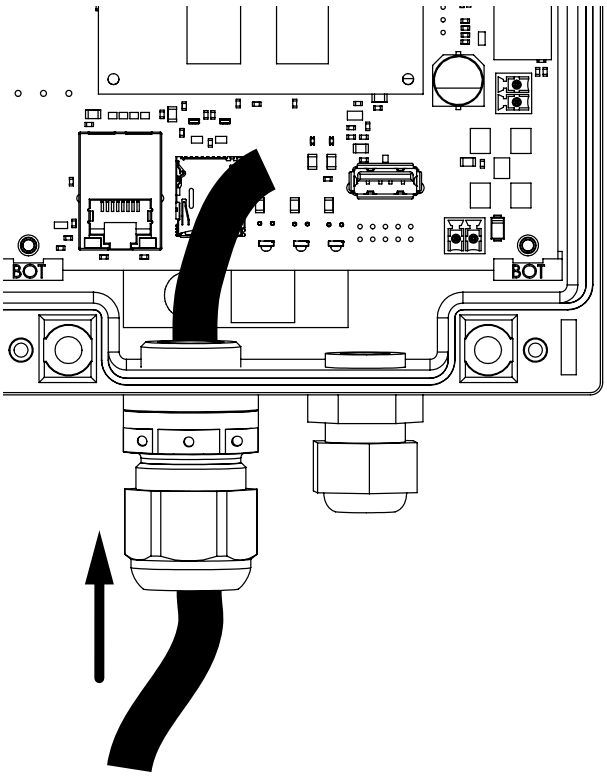

A6. Strip the Ethernet Cable

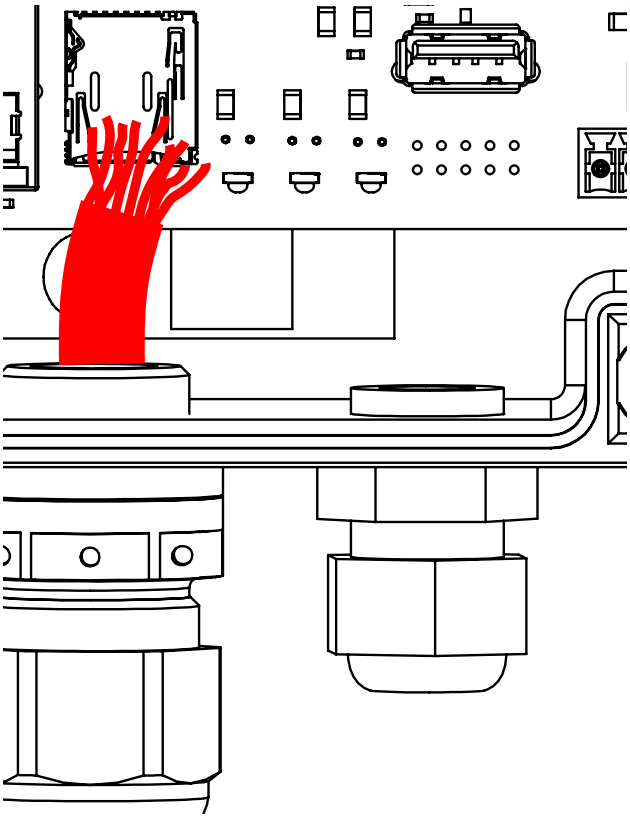

A7. Place connector onto Ethernet Cable and crimp it into place

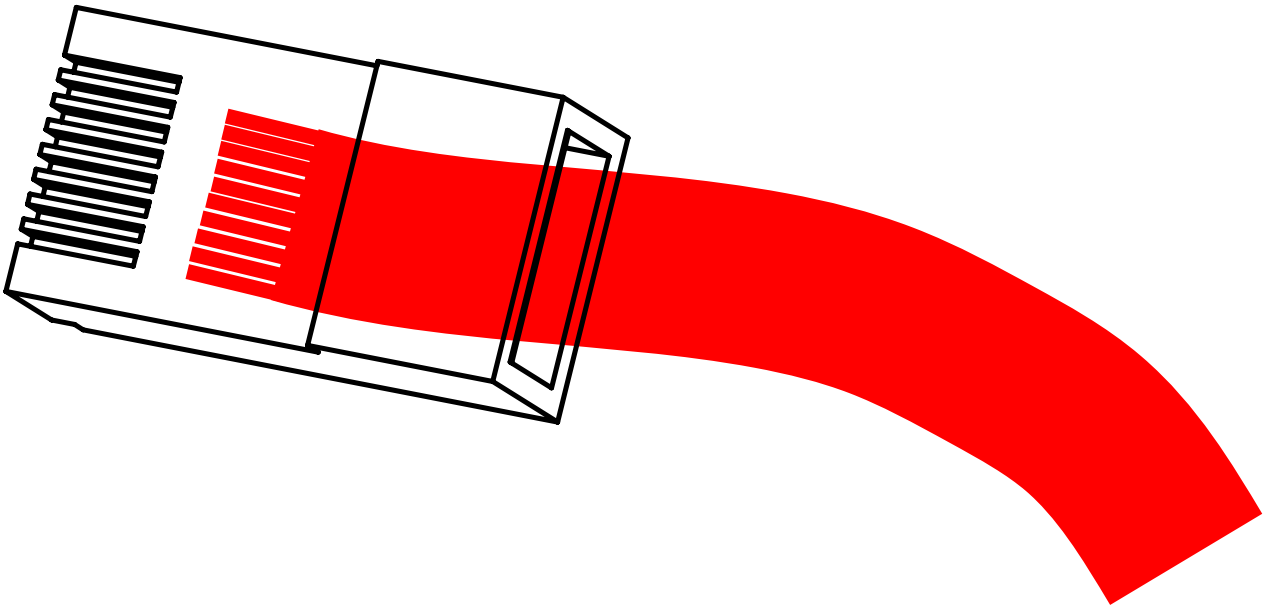

A8. Connect the Ethernet Cable to the Ethernet port on the GW PCB

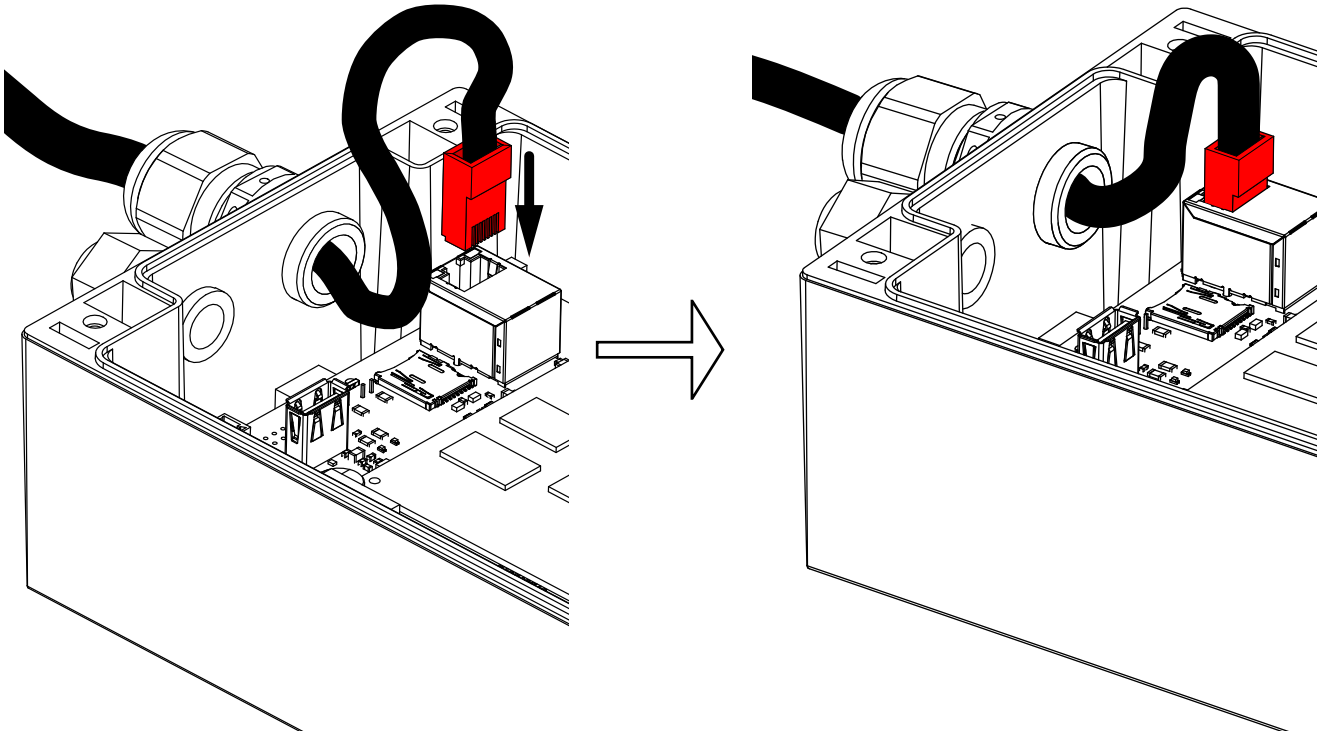

A9. Tighten the Venting Cable Gland to achieve a watertight seal between the Cable Gland and the Ethernet Cable

Note: Installation Torque of Cap Nut: 3 Nm.